# Acoustic Louvers

## A Complete Range of Certified, High-Performance Acoustic Louvers to Solve Diverse Environmental Noise Pollution Problems

- Certified performance data per ASTM E90
- Easy to install and engineered for high performance
- Rugged galvanized construction (other materials available)
- Standard and specialty shaped louvers available
- Louver barriers/walls
- Airfoil and straight splitter blades available
- Variety of durable attractive finishes
- Over 60 years experience

iac acoustics
A DIVISION OF SOUND SEAL

# IAC Acoustics

## Making the World a Quieter Place

**Founded on an unrivalled history of engineering with some of the most pioneering discoveries in the industry, the IAC Acoustics brand is synonymous with technological innovation.**

From controlling noise at a power station to tuning the sound in a TV or radio studio, IAC Acoustics has had a positive impact on society and helped to shape what can be achieved to make speech more intelligible, make music more enjoyable, reduce the impact of industrial noise and protect people's sense of hearing.

The continual success of our products and services over the decades has brought the brand a reputation for quality and reliability among customers, whether they are multinational corporations or independent family businesses. This is supported by the expertise and passion of our workforce, the people behind the products, including designers, engineers and industry experts.

To face the ever increasing noise reduction demands of the future, we will strive to further enhance our ability to reduce excessive noise. We aim to focus on developing tomorrow's solution today, innovating faster and delivering solutions that meet the requirements of the next generation. In doing so, we will stay true to our key values and founding philosophy to make the world a quieter place.

# Table of Contents

# Acoustic Louvers Overview

IAC Acoustics is a leading global manufacturer of rugged, high performance acoustic louvers and has completed thousands of installations worldwide. Applications include:

## Air Conditioning Systems & Equipment

- Return air and supply systems
- Cross-talk silencers
- Recording and broadcasting studios
- Air conditioning and refrigeration equipment
- Ventilation openings
- Cooling towers
- Data centers
- Fans
- Hospitals
- Hotels and motels
- Boiler rooms
- Conference rooms

## Industrial, Transportation & Construction Equipment

- Diesel generator sets
- Marine or propulsion fans
- Machinery enclosures
- Gas turbines
- Oil coolers
- Electric motors
- Trucks and buses
- Locomotives
- Transformer barriers
- Tractors
- Pumps
- Bulldozers
- Air compressors
- Diesel powered vehicles and equipment
- Industrial cooling towers
- Noise barriers
- Air coolers

IAC Acoustics can provide louver solutions to combat environmental noise problems in mixed commercial / residential areas, carrying out all relevant noise surveys and acoustical analysis.

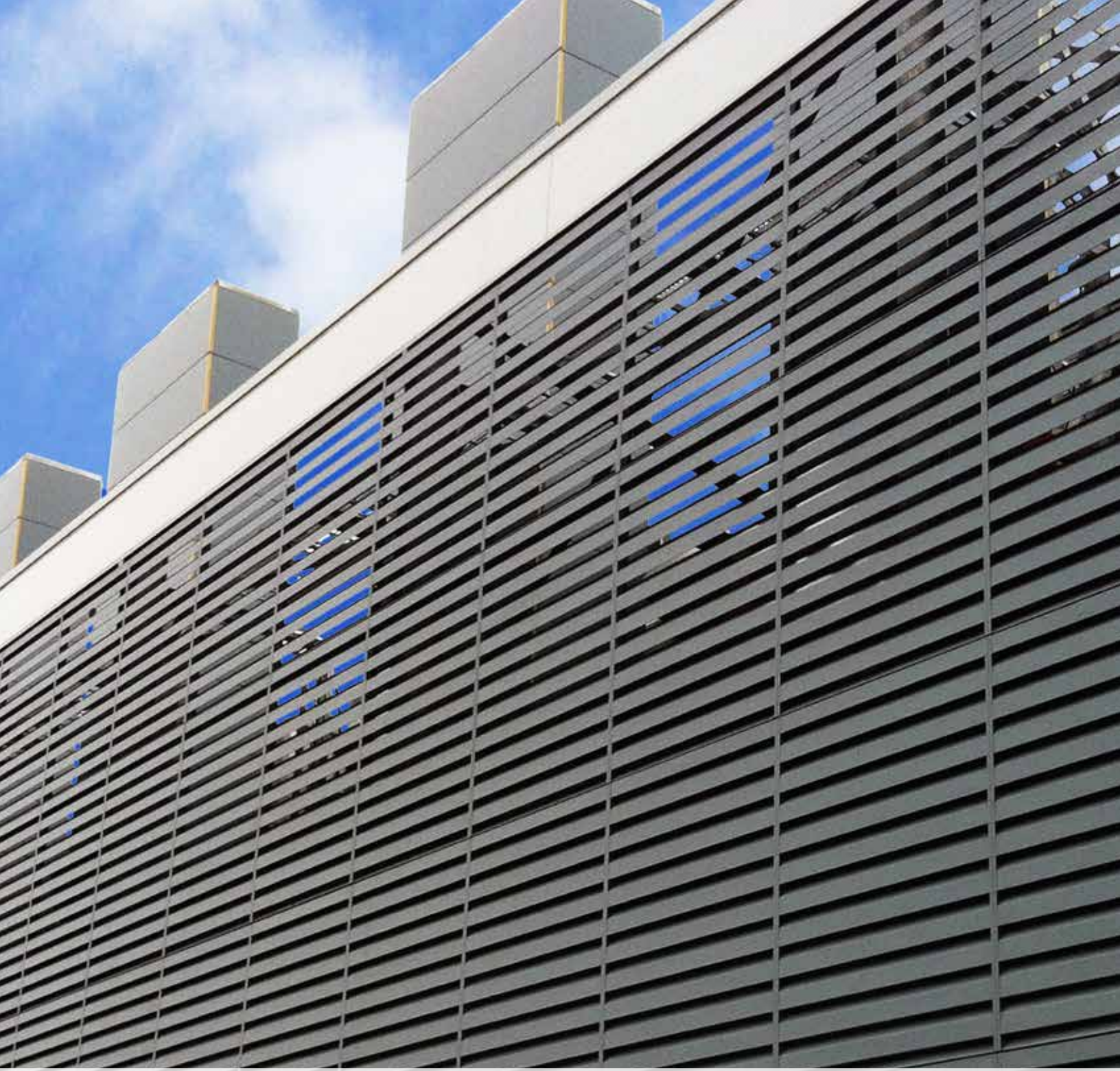

## Form & Function Together

IAC Acoustics Noishield™ (curved) or Slimshield™ (linear) blade louver styles can be used to match the overall scale and aesthetics of a new or existing building.

Our acoustic louvered screens result in a high performance solution to unwanted levels of noise without the need for additional architectural cladding.

# Acoustic Louvers Range

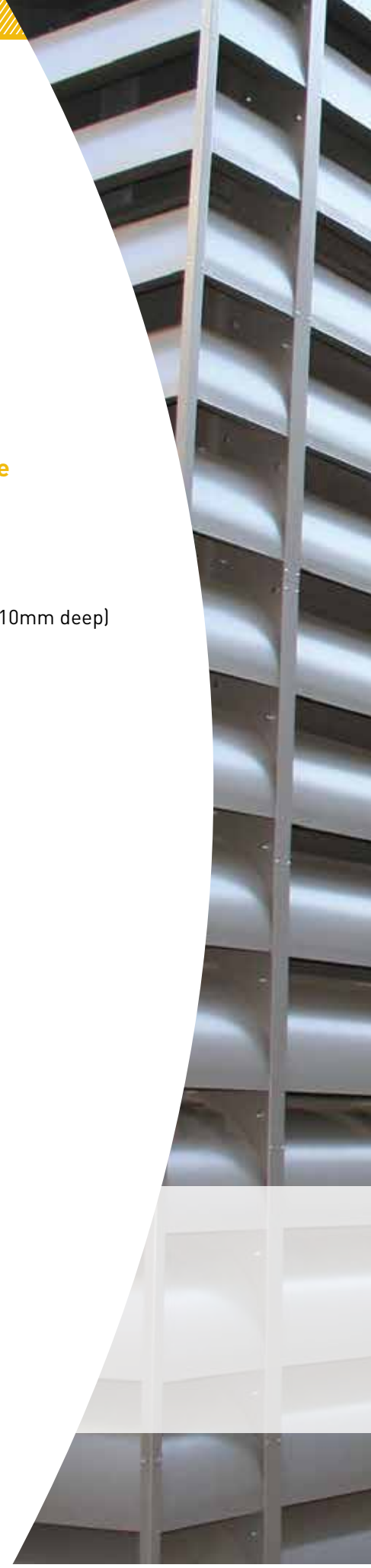

## Noishield™ – Airfoil Blade

- Model R & Model LP: 12" (305mm) deep
- Model 2R & Model 2LP: 24" (610mm) deep
- LF2-24: 24" (610mm) deep

## Slimshield™ – Linear Blade

- SL-4: 4" (101mm deep)
- SL-6: 6" (152mm) deep
- SL-12: 12" (305mm deep)
- SL-24 (double banked): 24" (610mm deep)

## Noishield™ Louvers – Sound Transmission Loss (dB)

| Model | Louver Depth | Octave Band Center Frequency, Hz | | | | | | | |
|---|---|---|---|---|---|---|---|---|---|
| | | 63 | 125 | 250 | 500 | 1k | 2k | 4k | 8k |
| | | Sound Transmission Loss, dB | | | | | | | |
| Model R | 12" | 5 | 7 | 11 | 12 | 13 | 14 | 12 | 9 |
| Model 2R | 24" | 6 | 12 | 15 | 21 | 24 | 27 | 25 | 20 |
| Model LP | 12" | 4 | 5 | 8 | 9 | 12 | 9 | 7 | 6 |
| Model 2LP | 24" | 5 | 8 | 12 | 16 | 22 | 18 | 15 | 14 |
| Model LF2-24 | 24" | 6 | 11 | 19 | 24 | 28 | 23 | 17 | 17 |

## Slimshield™ Louvers – Sound Transmission Loss (dB)

| Model | Louver Depth | Octave Band Center Frequency, Hz | | | | | | | |
|---|---|---|---|---|---|---|---|---|---|
| | | 63 | 125 | 250 | 500 | 1k | 2k | 4k | 8k |
| | | Sound Transmission Loss, dB | | | | | | | |
| SL-4 | 4" | 5 | 4 | 5 | 6 | 9 | 13 | 14 | 13 |
| SL-6 | 6" | 6 | 6 | 8 | 10 | 14 | 18 | 16 | 15 |
| SL-12 | 12" | 6 | 7 | 10 | 12 | 18 | 18 | 14 | 13 |
| SL-24 | 24" | 7 | 9 | 12 | 24 | 31 | 33 | 29 | 30 |

IAC Acoustics' acoustical louvers adhere to and are applicable to ASTM Standard E90.

## Integrated or Standalone

Our acoustic louvers can be used as standalone screens around mechanical plants, or be integrated into walls and building façades.

# Product Features

Our acoustic louvers are multi-purpose, permitting air to flow, while shielding the environment from unwanted noise.

Both IAC Acoustics Noishield™ and Slimshield™ louvers are available in an array of standard modular sizes, meaning that a wide range of performance requirements can be met. By using our range of acoustic louvers, it overcomes architectural consistency issues, especially where space is limited.

Where access is required, both Noishield™ and Slimshield™ acoustic louvers can be supplied as doorsets, either for inclusion in louvered screens, or as standalone units.

## Noishield™ Special Features

- Suitable for use behind architectural louvers (4"/101mm air space is required between faces)
- Bold, curved blade appearance
- A highly economical louver system

## Slimshield™ Special Features

- Linear appearance
- Superior high frequency performance

## Finishes Available

- Galvanized mill steel
- Aluminum
- Stainless steel
- Power coated finish

**Other non-standard finishes are available including:**

- Galvanized G-90 mill finish
- Galvannealed A-60 in various finishes
- Anodized aluminum
- Stainless steel
- Kynar finish

## Noishield™ Louver

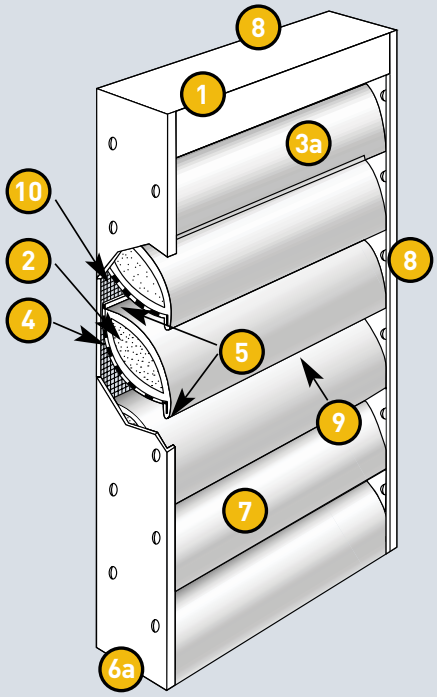


## Slimshield™ Louver

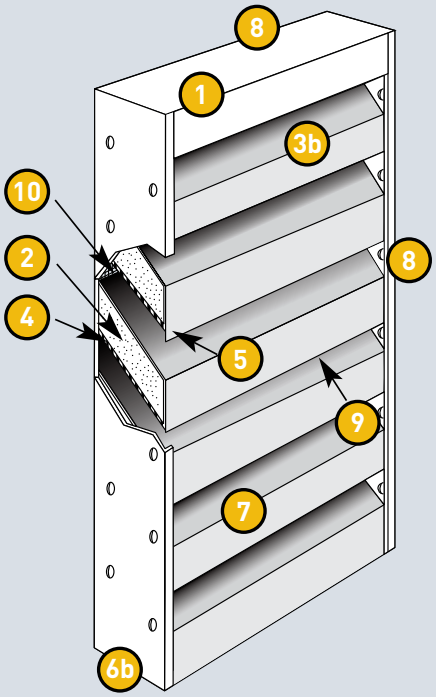


1. Rugged all-steel galvanized construction. Stainless steel, aluminum and other materials are also available
2. Inert, vermin-proof, weather-rated non combustible acoustic fill
3a. **FOR NOISHIELD™** airfoil shaped splitter blade for maximum noise reduction with minimum pressure drop
3b. **FOR SLIMSHIELD™** linear blade appearance for superior high frequency performance
4. Perforated splitter underside for maximum sound absorption
5. Weather stop inhibits rain / snow entry
6a. **FOR NOISHIELD™** 12" (305mm) for the single banked system or 24" (610mm) deep for the double banked system
6b. **FOR SLIMSHIELD™** 4, 6, 12" (101, 152, 305mm) deep single banked systems and 24" (610mm) deep for the double banked system
7. Available in a variety of durable, attractive finishes, including powder finish, Kynar, mill finish aluminum, anodized aluminum, galvanized and stainless steel
8. Modular sizes enable assembly of rectilinear louver 'screens' of almost any size
9. Louver blade orientation blocks horizontal line of site, enhancing both aesthetics and acoustic performance
10. Bird screens are available in galvanized or stainless steel, insect screens can also be supplied

# How to Specify Acoustic Louvers

## Specifying Noishield™ Louvers

Furnish and install Noishield™ louvers as manufactured by IAC Acoustics. For Model R, Model LP and Model LF2-24, outer casings are made of 16 gauge (1.613 mm) galvanized steel. Louver splitter blades (baffles) are airfoil configuration and made of 22 gauge (0.8534 mm) galvanized steel. They are packed with inert, vermin and moisture proof mineral fiber and provide the acoustical performance as indicated. For Model R, Model 2R, Model LP and Model 2LP, birdscreens are standard on one side only. Birdscreens will be installed on the perf side as standard. For Model LF2-24, birdscreens are not included. Please contact IAC Acoustics for birdscreen and installation options.

## Specifying Slimshield™ Louvers

Furnish and install Slimshield™ louvers as manufactured by IAC Acoustics. For SL-4, outer casings are made of 18 gauge (1.27 mm) galvanized steel. For SL-6, SL-12 and SL-24, outer casings are made of 16 gauge (1.613 mm) galvanized steel. Louver splitter blades (baffles) for all models are made of 22 gauge (0.8534 mm) galvanized steel. They are packed with inert, vermin and moisture proof mineral fiber and provide the acoustical performance as indicated. For all Slimshield™ louvers, birdscreens are not included. Please contact IAC Acoustics for birdscreen options.

IAC Acoustics' acoustical louvers adhere to and are applicable to ASTM Standard E90.

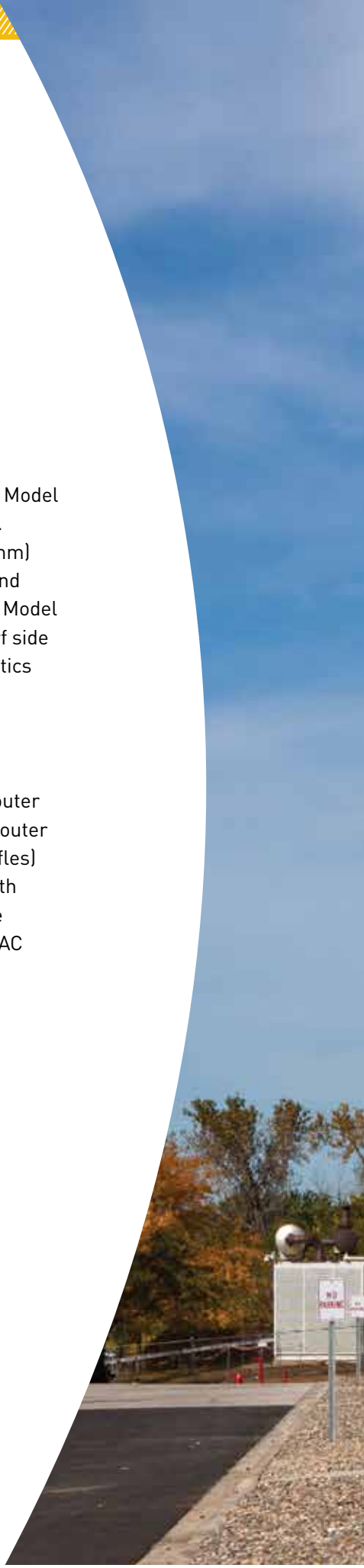

# Acoustic Louver Installation

Typical details are shown below. IAC Acoustics will supply all supporting steelwork if necessary. For large louver banks, IAC Acoustics can supply supporting steelwork, engineering services and drawings along with installation if desired.

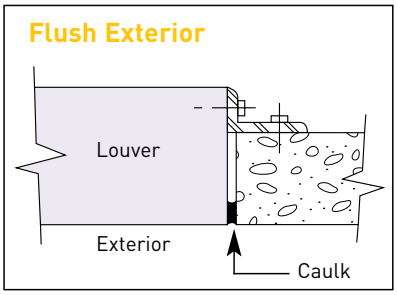


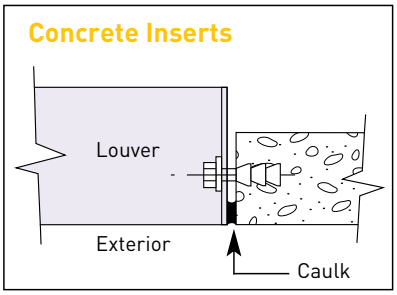


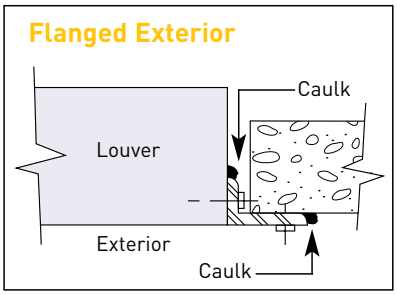


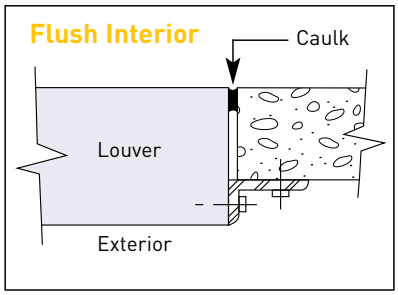


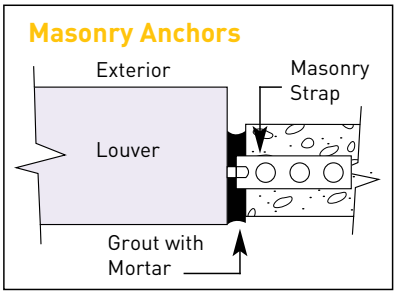


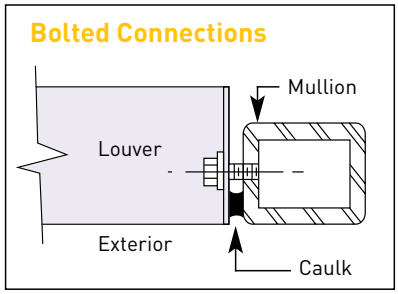


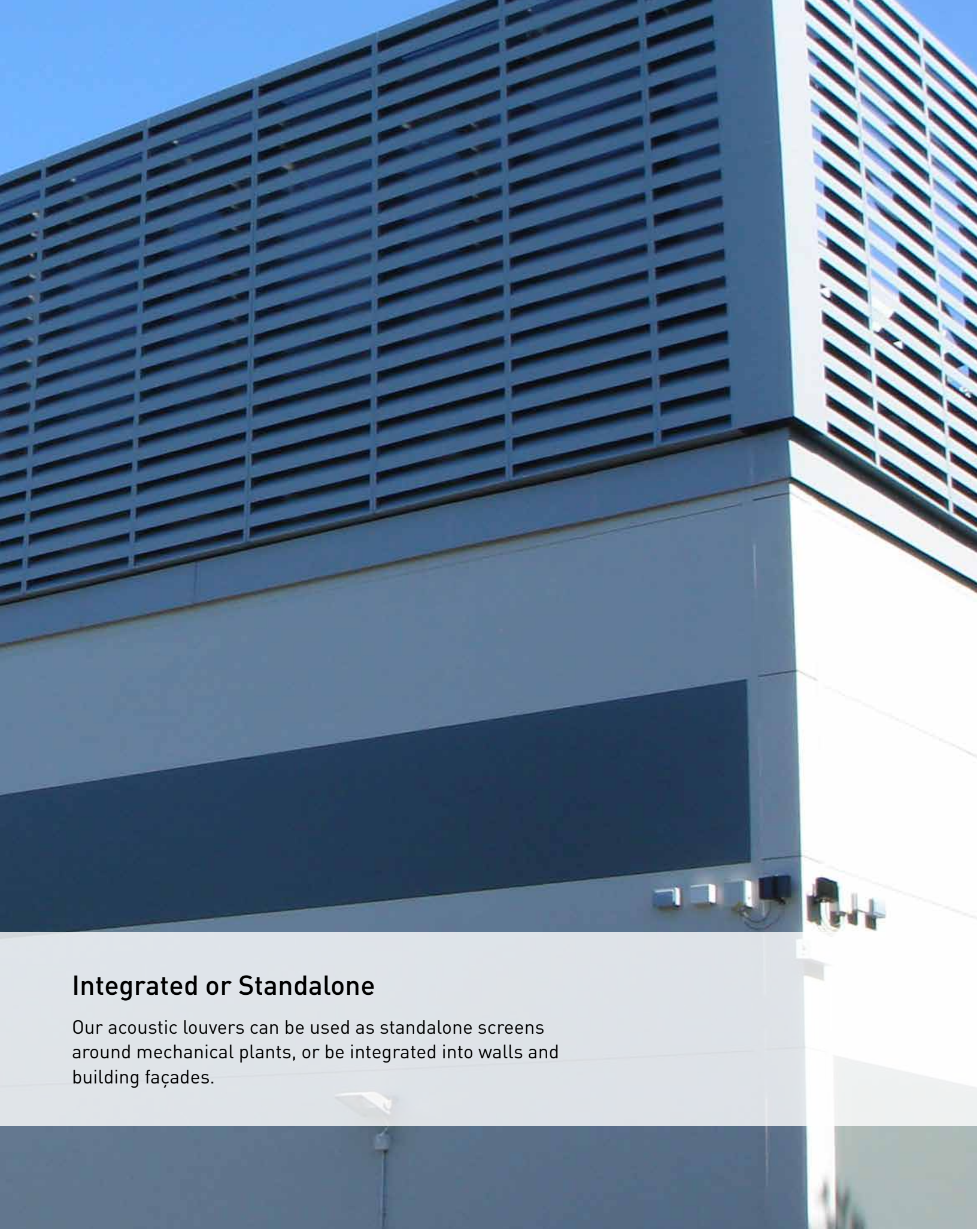

## Integrated or Standalone

Our acoustic louvers can be used as standalone screens around mechanical plants, or be integrated into walls and building façades.

# Acoustic Louver Specifications

**Page**



# Noishield™ Acoustic Louvers (Model R)

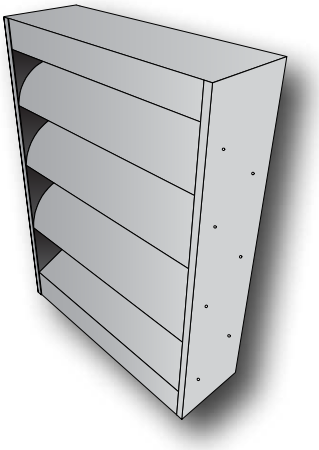

## Weight

11 lbs/ft² (54kg/m²)

## Typical Module Width

12" - 72" (305-1829mm)

## Standard Module Height

24" - 144" with increments of 12" (610mm - 3658mm with increments of 305mm)

Intermediate heights are available

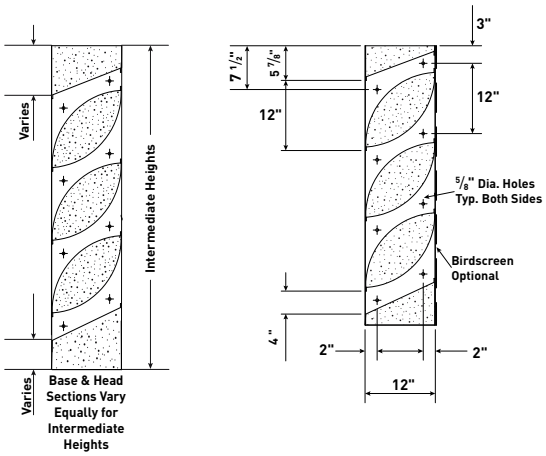


## Acoustic Performance

| Octave Band Center Frequency (Hz) | 63 | 125 | 250 | 500 | 1K | 2K | 4K | 8K |
|---|---|---|---|---|---|---|---|---|
| Transmission Loss (dB) | 5 | 7 | 11 | 12 | 13 | 14 | 12 | 9 |

Transmission Loss tested in accordance with ASTM E90.
For Noise Reduction, add 6 dB to the above values.

## Water Penetration

To minimize water penetration, limit face velocity to 225 ft/min (1.2 m/sec).

## Acoustic Louvered Doors

- Single and double doors are available in the Model R louver range
- See page 28 for further details

## Aerodynamic Performance

| Static Pressure Drop (i.w.g.) | .05 | .10 | .15 | .20 | .25 | .30 | .40 | .50 | .60 | .75 | 1.0 | 1.25 |
|---|---|---|---|---|---|---|---|---|---|---|---|---|
| Face Velocity (fpm) | 215 | 305 | 375 | 430 | 480 | 525 | 610 | 675 | 745 | 830 | 960 | 1070 |

For other velocities:

$$\Delta P_2 = \Delta P_1 \left(\frac{V_2}{V_1}\right)^2$$

Ex: 5,000 cfm through a 24"w x 60"h Model R Louver
Face Velocity = V = 5,000 cfm / 10 ft² = 500 ft/min
$\Delta P_s$ = 0.25 x (500/480)² = 0.27" wc

Nominal Free Area for standard heights: 20%

## Self-Noise (SN) Power Levels (Lw)

| Octave Band | 1 | 2 | 3 | 4 | 5 | 6 | 7 | 8 |
|---|---|---|---|---|---|---|---|---|
| Hz | 63 | 125 | 250 | 500 | 1K | 2K | 4K | 8K |
| Louver Face Velocity (V), fpm | | | | | | | | |
| -1000 | 72 | 78 | 74 | 68 | 66 | 64 | 62 | 53 |
| -750 | 69 | 70 | 66 | 61 | 59 | 57 | 50 | 44 |
| -500 | 53 | 53 | 50 | 47 | 45 | 41 | 33 | 24 |
| 500 | 56 | 54 | 52 | 48 | 43 | 40 | 32 | 22 |
| 750 | 69 | 72 | 69 | 66 | 58 | 54 | 51 | 43 |
| 1000 | 74 | 81 | 80 | 75 | 67 | 62 | 61 | 54 |

For areas other than 4 ft², add or subtract from above Lw values:

$$10 \text{ LOG } \left(\frac{\text{Louver Face Area, ft}^2}{4}\right)$$

Ex 1: 48" x 48" SN @ +500 ft/min @ 1 kHz = 43 + 10 LOG (16/4) = 43 + 6 = 49 dB
Ex 2: 12" x 24" SN @ +500 ft/min @ 1 kHz = 43 + 10 LOG (2/4) = 43 - 3 = 40 dB

## Self-Noise Test Arrangement

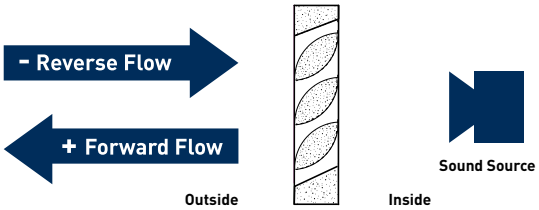

# Noishield™ Acoustic Louvers (Model 2R)

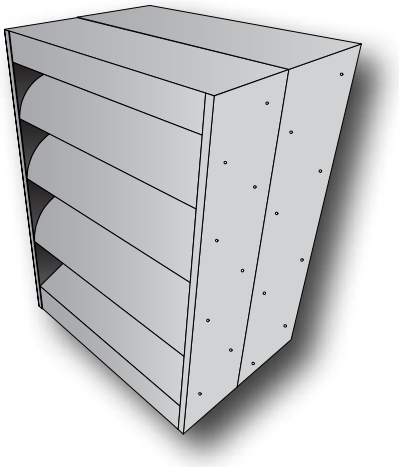

## Weight

22 lbs/ft² (107kg/m²)

## Typical Module Width

12" - 72" (305-1829mm)

## Standard Module Height

24" - 144" with increments of 12" (610mm - 3658mm with increments of 305mm)

Intermediate heights are available

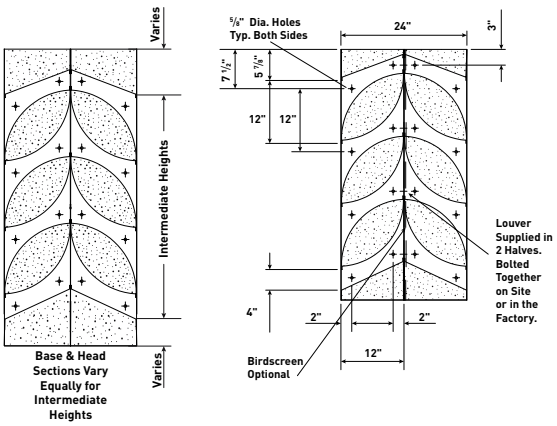


## Acoustic Performance

| Octave Band Center Frequency (Hz) | 63 | 125 | 250 | 500 | 1K | 2K | 4K | 8K |
|---|---|---|---|---|---|---|---|---|
| Transmission Loss (dB) | 6 | 12 | 15 | 21 | 24 | 27 | 25 | 20 |

Transmission Loss tested in accordance with ASTM E90.
For Noise Reduction, add 6 dB to the above values.

## Water Penetration

To minimize water penetration, limit face velocity to 225 ft/min (1.2 m/sec).

## Aerodynamic Performance

| Static Pressure Drop (i.w.g.) | .05 | .10 | .15 | .20 | .25 | .30 | .40 | .50 | .60 | .75 | 1.0 | 1.25 |
|---|---|---|---|---|---|---|---|---|---|---|---|---|
| Face Velocity (fpm) | 154 | 235 | 264 | 305 | 337 | 364 | 371 | 468 | 509 | 573 | 661 | 739 |

For other velocities:

$$\Delta P_2 = \Delta P_1 \left(\frac{V_2}{V_1}\right)^2$$

Ex: 5,000 cfm through a 24"w x 60"h Model 2R Louver
Face Velocity = V = 5,000 cfm / 10 ft² = 500 ft/min
$\Delta P_s$ = 0.50 x (500/468)² = 0.57" wc

Nominal Free Area for standard heights: 20%

## Self-Noise (SN) Power Levels (Lw)

| Octave Band | 1 | 2 | 3 | 4 | 5 | 6 | 7 | 8 |
|---|---|---|---|---|---|---|---|---|
| Hz | 63 | 125 | 250 | 500 | 1K | 2K | 4K | 8K |
| Louver Face Velocity (V), fpm | | | | | | | | |
| -1000 | 76 | 81 | 77 | 71 | 66 | 63 | 60 | 57 |
| -750 | 71 | 71 | 67 | 62 | 57 | 54 | 50 | 45 |
| -500 | 58 | 58 | 54 | 49 | 43 | 39 | 33 | 24 |
| 500 | 64 | 64 | 59 | 57 | 49 | 47 | 43 | 35 |
| 750 | 75 | 76 | 72 | 70 | 62 | 57 | 56 | 50 |
| 1000 | 80 | 85 | 81 | 78 | 71 | 65 | 62 | 60 |

For areas other than 4 ft²,
add or subtract from above Lw values:

$$10 \text{ LOG } \left(\frac{\text{Louver Face Area, ft}^2}{4}\right)$$

Ex 1: 48" x 48" SN @ +500 ft/min @ 1 kHz = 49 + 10 LOG (16/4) = 49 + 6 = 55 dB
Ex 2: 12" x 24" SN @ +500 ft/min @ 1 kHz = 48 + 10 LOG (2/4) = 49 - 3 = 46 dB

## Self-Noise Test Arrangement

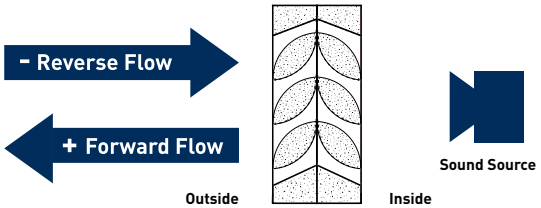

# Noishield™ Acoustic Louvers (Model LP)

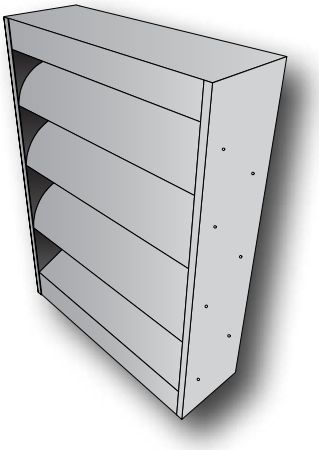

## Weight

9.5 lbs/ft² (46.4 kg/m²)

## Typical Module Width

12" - 72" (305-1829mm)

## Standard Module Height

28" - 140" with increments of 14" (711mm - 3658 mm with increments of 356 mm)

Intermediate heights are available

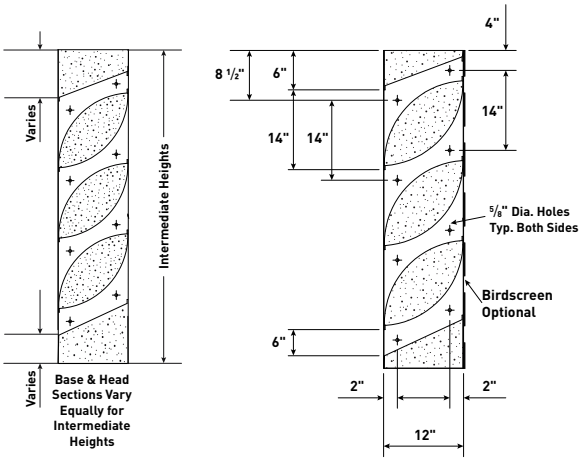


## Acoustic Performance

| Octave Band Center Frequency (Hz) | 63 | 125 | 250 | 500 | 1K | 2K | 4K | 8K |
|---|---|---|---|---|---|---|---|---|
| Transmission Loss (dB) | 4 | 5 | 8 | 9 | 12 | 9 | 7 | 6 |

Transmission Loss tested in accordance with ASTM E90.
For Noise Reduction, add 6 dB to the above values.

## Water Penetration

To minimize water penetration, limit face velocity to 315 ft/min (1.6 m/sec).

## Acoustic Louvered Doors

- Single and double doors are available in the Model LP louver range
- See page 28 for further details

## Aerodynamic Performance

| Static Pressure Drop (i.w.g.) | .05 | .10 | .15 | .20 | .25 | .30 | .40 | .50 | .60 | .75 | 1.0 | 1.25 |
|---|---|---|---|---|---|---|---|---|---|---|---|---|
| Face Velocity (fpm) | 270 | 380 | 465 | 540 | 600 | 660 | 760 | 850 | 925 | 1040 | 1200 | 1340 |

For other velocities:

$$\Delta P_2 = \Delta P_1 \left(\frac{V_2}{V_1}\right)^2$$

Ex: 5,000 cfm through a 24"w x 70"h Model LP Louver
Face Velocity = V = 5,000 cfm / 11.67 ft² = 429 ft/min
$\Delta P_s$ = 0.10 x (429/380)² = 0.13" wc

Nominal Free Area for standard heights: 30%

## Self-Noise (SN) Power Levels (Lw)

| Octave Band | 1 | 2 | 3 | 4 | 5 | 6 | 7 | 8 |
|---|---|---|---|---|---|---|---|---|
| Hz | 63 | 125 | 250 | 500 | 1K | 2K | 4K | 8K |
| Louver Face Velocity (V), fpm | | | | | | | | |
| -1000 | 72 | 75 | 71 | 67 | 61 | 60 | 55 | 49 |
| -750 | 66 | 68 | 64 | 60 | 54 | 52 | 46 | 39 |
| -500 | 54 | 57 | 54 | 49 | 43 | 40 | 31 | 24 |
| 500 | 58 | 61 | 58 | 55 | 48 | 46 | 38 | 30 |
| 750 | 69 | 73 | 70 | 67 | 60 | 57 | 52 | 45 |
| 1000 | 77 | 81 | 79 | 77 | 70 | 64 | 60 | 55 |

For areas other than 4.67 ft², add or subtract from above Lw values:

$$10 \text{ LOG } \left(\frac{\text{Louver Face Area, ft}^2}{4.67}\right)$$

Ex 1: 24" x 84" SN @ +500 ft/min @ 1 kHz = 44 + 10 LOG (14/4.67) = 44 + 4.8 = 48.8 dB
Ex 2: 12" x 42" SN @ +500 ft/min @ 1 kHz = 43 + 10 LOG (3.5/4.67) = 44 - 1.3 = 42.7 dB

## Self-Noise Test Arrangement

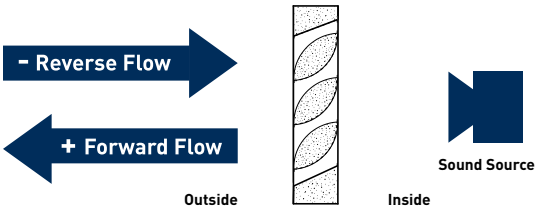

# Noishield™ Acoustic Louvers (Model 2LP)

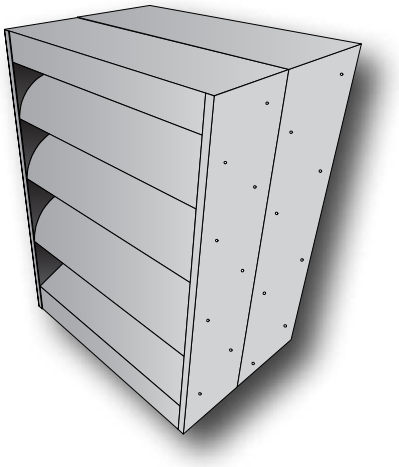

## Weight

19 lbs/ft² (92.8kg/m²)

## Typical Module Width

12" - 72" (305-1829mm)

## Standard Module Height

28" - 140" with increments of 14" (711mm - 3556mm with increments of 356mm)

Intermediate heights are available

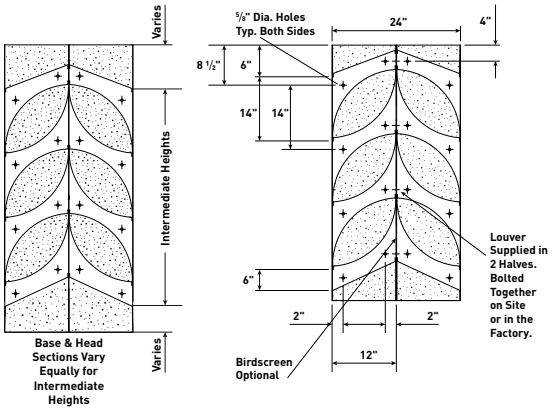


## Acoustic Performance

| Octave Band Center Frequency (Hz) | 63 | 125 | 250 | 500 | 1K | 2K | 4K | 8K |
|---|---|---|---|---|---|---|---|---|
| Transmission Loss (dB) | 5 | 8 | 12 | 16 | 22 | 18 | 15 | 14 |

Transmission Loss tested in accordance with ASTM E90.
For Noise Reduction, add 6 dB to the above values.

## Water Penetration

To minimize water penetration, limit face velocity to 315 ft/min (1.6 m/sec).

## Aerodynamic Performance

| Static Pressure Drop (i.w.g.) | .05 | .10 | .15 | .20 | .25 | .30 | .40 | .50 | .60 | .75 | 1.0 | 1.25 |
|---|---|---|---|---|---|---|---|---|---|---|---|---|
| Face Velocity (fpm) | 235 | 310 | 377 | 434 | 493 | 533 | 613 | 685 | 758 | 852 | 984 | 1100 |

For other velocities:

$$\Delta P_2 = \Delta P_1 \left(\frac{V_2}{V_1}\right)^2$$

Ex: 5,000 cfm through a 24"w x 70"h Model 2LP Louver
Face Velocity = V = 5,000 cfm / 11.67 ft² = 429 ft/min
$\Delta P_s$ = 0.15 x (429/377)² = 0.19" wc

Nominal Free Area for standard heights: 30%

## Self-Noise (SN) Power Levels (Lw)

| Octave Band | 1 | 2 | 3 | 4 | 5 | 6 | 7 | 8 |
|---|---|---|---|---|---|---|---|---|
| Hz | 63 | 125 | 250 | 500 | 1K | 2K | 4K | 8K |
| Louver Face Velocity (V), fpm | | | | | | | | |
| -1000 | 76 | 81 | 77 | 71 | 66 | 63 | 60 | 57 |
| -750 | 71 | 71 | 67 | 62 | 57 | 54 | 50 | 45 |
| -500 | 58 | 58 | 54 | 49 | 43 | 39 | 33 | 24 |
| 500 | 64 | 64 | 59 | 57 | 49 | 47 | 43 | 35 |
| 750 | 75 | 76 | 72 | 70 | 62 | 57 | 56 | 50 |
| 1000 | 80 | 85 | 81 | 78 | 71 | 65 | 62 | 60 |

For areas other than 4.67 ft²,
add or subtract from above Lw values:

$$10 \text{ LOG } \left(\frac{\text{Louver Face Area, ft}^2}{4.67}\right)$$

Ex 1: 24" x 84" SN @ +500 ft/min @ 1 kHz = 48 + 10 LOG (14/4.67) = 48 + 4.8 = 52.8 dB
Ex 2: 12" x 42" SN @ +500 ft/min @ 1 kHz = 48 + 10 LOG (3.5/4.67) = 48 - 1.3 = 46.7 dB

## Self-Noise Test Arrangement

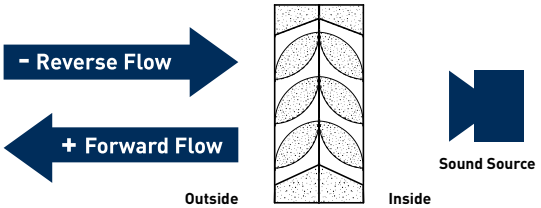

# Noishield™ Acoustic Louvers (Model LF2-24)

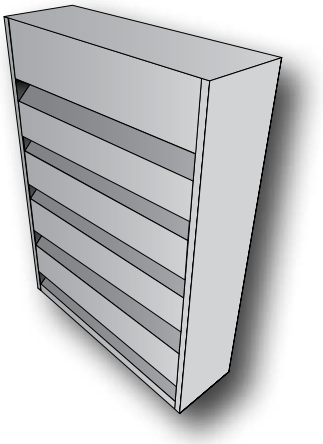

## Weight

22 lbs / ft² (107.4 kg / m²)

## Typical Module Width

12" - 48" (305 - 1219 mm)

## Standard Module Height

34" minimum, with increments of 17" (863 mm minimum, with increments of 432 mm)

Intermediate heights are available

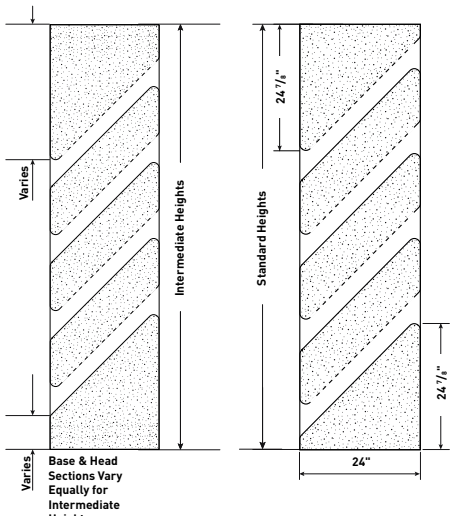


## Acoustic Performance

| Octave Band Center Frequency (Hz) | 63 | 125 | 250 | 500 | 1K | 2K | 4K | 8K |
|---|---|---|---|---|---|---|---|---|
| Transmission Loss (dB) | 6 | 11 | 19 | 24 | 28 | 23 | 17 | 17 |

Transmission Loss tested in accordance with ASTM E90.
For Noise Reduction, add 6 dB to the above values.

## Aerodynamic Performance

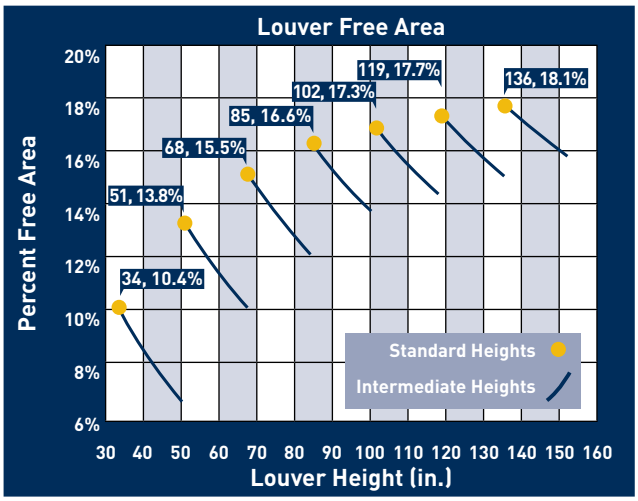


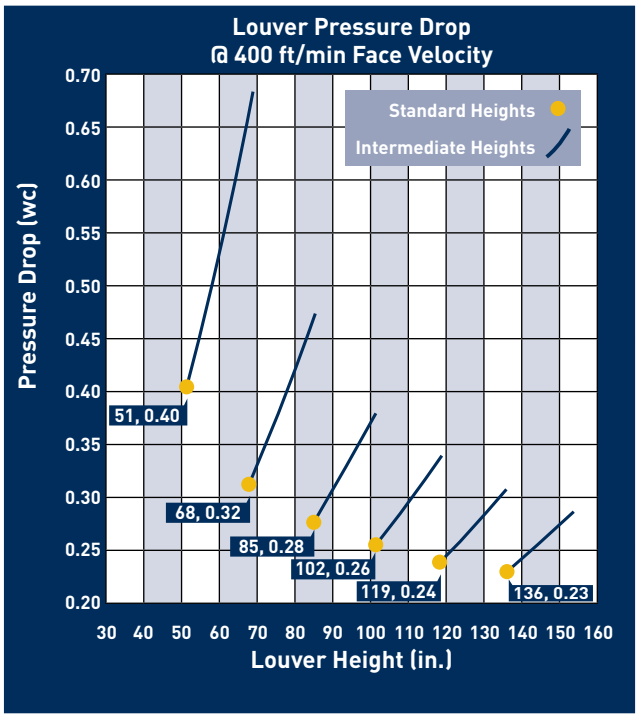


For other velocities:

$$\Delta P_2 = \Delta P_1 \left(\frac{V_2}{V_1}\right)^2$$

Ex: 20,000 cfm face velocity through a 48"w x 119"h Model LF2-24 Louver
Face Velocity = V = 20,000 cfm / 39.7 ft² = 504 ft/min
$\Delta P_s$ = 0.24 x (504/400)² = 0.38" wc

# Slimshield™ Acoustic Louvers (Model SL-4)

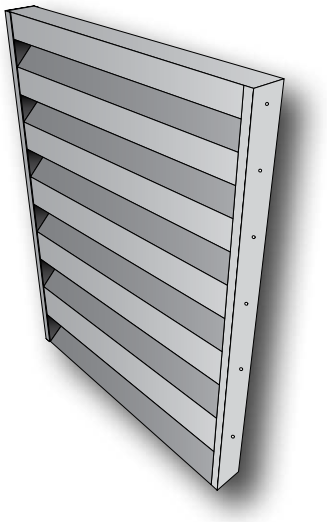

### Weight

4 lbs/ft² (19.5 kg/m²)

### Typical Module Width

12" - 60" (305 - 1524 mm)

### Standard Module Height

18" minimum, with increments of 8" (450 mm minimum, with increments of 203 mm)

Intermediate heights are available

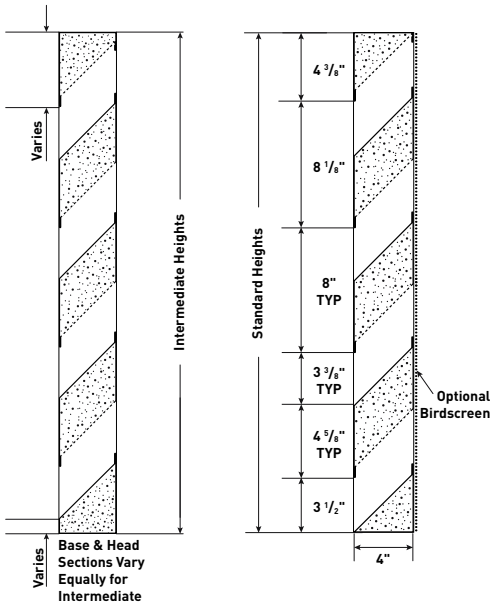


## Acoustic Performance

| Octave Band Center Frequency (Hz) | 63 | 125 | 250 | 500 | 1K | 2K | 4K | 8K |
|---|---|---|---|---|---|---|---|---|
| Transmission Loss (dB) | 5 | 4 | 5 | 6 | 9 | 13 | 14 | 13 |

Transmission Loss tested in accordance with ASTM E90.
For Noise Reduction, add 6 dB to the above values.

## Aerodynamic Performance

| Static Pressure Drop (i.w.g.) | .05 | .10 | .15 | .20 | .25 | .30 | .40 | .50 | .60 | .75 | 1.0 | 1.25 |
|---|---|---|---|---|---|---|---|---|---|---|---|---|
| Face Velocity (fpm) | 202 | 285 | 350 | 404 | 452 | 495 | 571 | 639 | 700 | 785 | 904 | 1011 |

For other velocities:

$$\Delta P_2 = \Delta P_1 \left(\frac{V_2}{V_1}\right)^2$$

Ex: 5,000 cfm through a 24"w x 64"h Model SL-4 Louver
Face Velocity = V = 5,000 cfm / 10.67 ft² = 469 ft/min
$\Delta P_s$ = 0.30 x (469/495)² = 0.27" wc

Nominal Free Area for standard heights: 30%

## Water Penetration

To minimize water penetration, limit face velocity to 217 ft/min (1.1 m/sec).

## Acoustic Louvered Doors

- Single and double doors are available in the SL-4 louver range
- See page 28 for further details

# Slimshield™ Acoustic Louvers (Model SL-6)

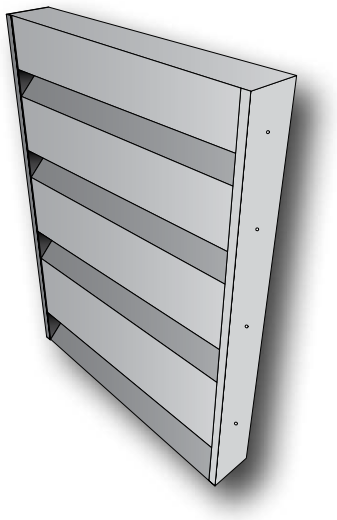

### Weight

6 lbs/ft² (30kg/m²)

### Typical Module Width

12" - 60" (305-1524mm)

### Standard Module Height

18" - 140" with increments of 12" (450 mm minimum, with increments of 305 mm)

Intermediate heights are available

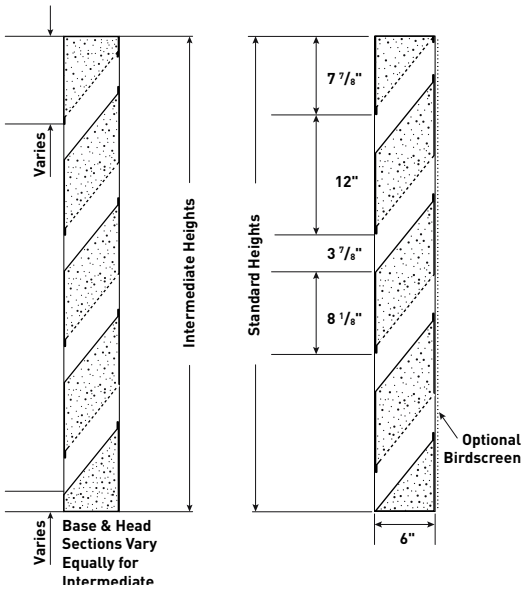


## Acoustic Performance

| Octave Band Center Frequency (Hz) | 63 | 125 | 250 | 500 | 1K | 2K | 4K | 8K |
|---|---|---|---|---|---|---|---|---|
| Transmission Loss (dB) | 6 | 6 | 8 | 10 | 14 | 18 | 16 | 15 |

Transmission Loss tested in accordance with ASTM E90.
For Noise Reduction, add 6 dB to the above values.

## Aerodynamic Performance

| Static Pressure Drop (i.w.g.) | .05 | .10 | .15 | .20 | .25 | .30 | .40 | .50 | .60 | .75 | 1.0 | 1.25 |
|---|---|---|---|---|---|---|---|---|---|---|---|---|
| Face Velocity (fpm) | 115 | 160 | 197 | 228 | 255 | 280 | 322 | 360 | 395 | 440 | 510 | 570 |

For other velocities:

$$\Delta P_2 = \Delta P_1 \left(\frac{V_2}{V_1}\right)^2$$

Ex: 5,000 cfm through a 48"w x 60"h Model SL-6 Louver
Face Velocity = V = 5,000 cfm / 20 ft² = 250 ft/min
$\Delta P_s$ = 0.25 x (250/255)² = 0.24" wc

Nominal Free Area for standard heights: 20%

## Water Penetration

To minimize water penetration, limit face velocity to 175 ft/min (0.89 m/sec).

## Acoustic Louvered Doors

- Single and double doors are available in the SL-6 louver range
- See page 28 for further details

## Slimshield™ Acoustic Louvers (Model SL-12)

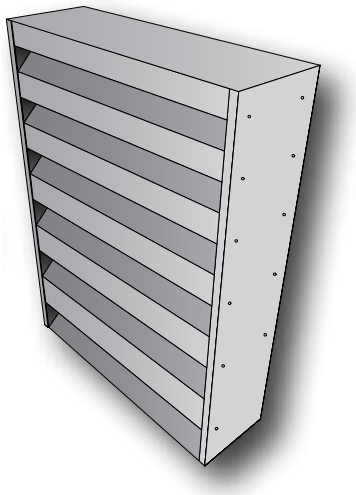

### Weight

10.3 lbs/ft² (50 kg/m²)

### Typical Module Width

12" - 72" (305 - 1829 mm)

### Standard Module Height

24" minimum, with increments of 12" (600mm minimum, with increments of 305 mm)

Intermediate heights are available

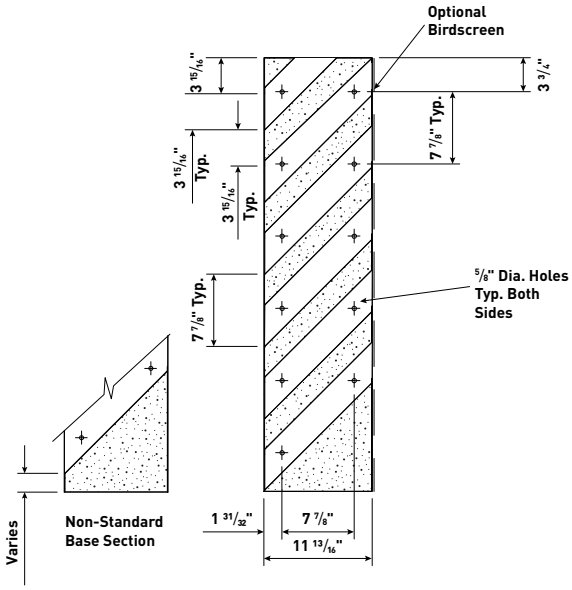


## Acoustic Performance

| Octave Band Center Frequency (Hz) | 63 | 125 | 250 | 500 | 1K | 2K | 4K | 8K |
|---|---|---|---|---|---|---|---|---|
| Transmission Loss (dB) | 6 | 7 | 10 | 12 | 18 | 18 | 14 | 13 |

Transmission Loss tested in accordance with ASTM E90.
For Noise Reduction, add 6 dB to the above values.

## Aerodynamic Performance

| Static Pressure Drop (i.w.g.) | .05 | .10 | .15 | .20 | .25 | .30 | .40 | .50 | .60 | .75 | 1.0 | 1.25 |
|---|---|---|---|---|---|---|---|---|---|---|---|---|
| Face Velocity (fpm) | 206 | 292 | 357 | 413 | 461 | 505 | 584 | 653 | 715 | 799 | 923 | 1032 |

For other velocities:

$$\Delta P_2 = \Delta P_1 \left(\frac{V_2}{V_1}\right)^2$$

Ex: 5,000 cfm through a 24"w x 63"h Model SL-12 Louver
Face Velocity = V = 5,000 cfm / 10.5 ft² = 476 ft/min
$\Delta P_s$ = 0.30 x (476/505)² = 0.27" wc

Nominal Free Area for standard heights: 30%

## Water Penetration

To minimize water penetration, limit face velocity to 309 ft/min (1.57 m/sec).

## Acoustic Louvered Doors

- Single and double doors are available in the SL-12 louver range
- See page 28 for further details

# Slimshield™ Acoustic Louvers (Model SL-24)

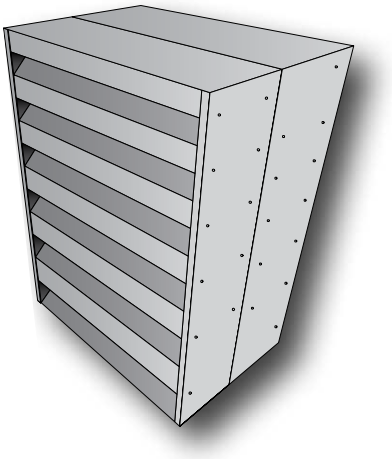

## Weight

20.6 lbs/ft² (30kg/m²)

## Typical Module Width

12" - 60" (305-1524mm)

## Standard Module Height

24" - 140" with increments of 12" (600 mm minimum, with increments of 305 mm)

Intermediate heights are available

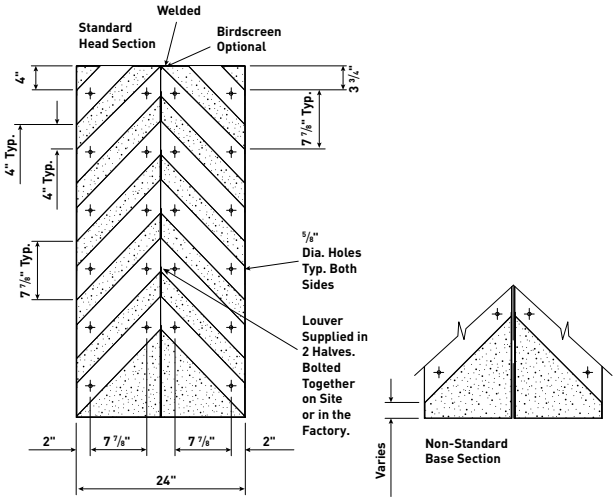


## Acoustic Performance

| Octave Band Center Frequency (Hz) | 63 | 125 | 250 | 500 | 1K | 2K | 4K | 8K |
|---|---|---|---|---|---|---|---|---|
| Transmission Loss (dB) | 7 | 9 | 12 | 24 | 31 | 33 | 29 | 30 |

Transmission Loss tested in accordance with ASTM E90.
For Noise Reduction, add 6 dB to the above values.

## Aerodynamic Performance

| Static Pressure Drop (i.w.g.) | .05 | .10 | .15 | .20 | .25 | .30 | .40 | .50 | .60 | .75 | 1.0 | 1.25 |
|---|---|---|---|---|---|---|---|---|---|---|---|---|
| Face Velocity (fpm) | 149 | 207 | 247 | 289 | 323 | 360 | 419 | 468 | 511 | 569 | 657 | 734 |

For other velocities:

$$\Delta P_2 = \Delta P_1 \left(\frac{V_2}{V_1}\right)^2$$

Ex: 5,000 cfm through a 24"w x 63"h Model SL-24 Louver
Face Velocity = V = 5,000 cfm / 10.5 ft² = 476 ft/min
$\Delta P_s$ = 0.50 x (476/468)² = 0.52" wc

Nominal Free Area for standard heights: 20%

## Water Penetration

To minimize water penetration, limit face velocity to 309 ft/min (1.57 m/sec).

# Acoustic Louvered Doors

- Single and double doors are available from the IAC Acoustics louver range
- The structural minimum is 33 1/2 in. (850mm) and is available up to 49" x 116" (1250 x 2950 mm) high as standard for a single door, and 98" x 116" (2500 x 2950 mm) high for a double door. Other widths and heights are available on request
- All doors can be supplied with various hardware, including hinges, latches, screws, nuts, bolts, washers, handles and supporting frames
- Acoustic louvered doors can be fitted with bird or insect screens on request
- Doors can be powder coated to match adjoining louvers
- Materials for the door and door frame include galvanized steel, stainless steel and aluminum
- Other door options may be available in the entire IAC Acoustics louver range. Please contact IAC Acoustics for more details.

## A Quality Solution

All IAC Acoustics products are designed to stand the test of time and manufactured to suit the application. From offshore environments to extremes in weather and ambient temperature, we can produce a highly engineered solution to your noise control issue.

# Harsh Environments

In addition to providing acoustic louvers located in everyday environments, IAC Acoustics also has the ability to modify products to suit more demanding applications.

# A True World Leader

In addition to providing acoustic louvers, IAC Acoustics is also able to provide the following solutions to noise control:

- Acoustic barriers
- Acoustic doors
- Acoustic enclosures
- Acoustic studios
- Acoustic wall treatments
- Acoustic windows
- Aero-engine test facilities
- Anechoic chambers
- Anti-vibration mounts
- Audiology booths
- Engine exhaust silencers
- Gas turbine acoustic packages
- Ground run-up enclosures
- HVAC attenuators
- Jet blast deflectors
- Medical rooms
- Vent silencers

Our wealth of engineering experience means that custom solutions can also be tailored for specific client applications. Please contact your local IAC Acoustics office should you require a unique solution.

## An Engineering Benchmark

IAC Acoustics products are respected worldwide for their quality and certified performance. Rest assured that IAC Acoustics can deliver a solution to your unwanted noise problem.

**USA - North Aurora, IL**
**T:** +1 (630) 270 1790
**F:** +1 (630) 966 9710
**E:** iacacoustics@soundseal.com


www.iacacoustics.com